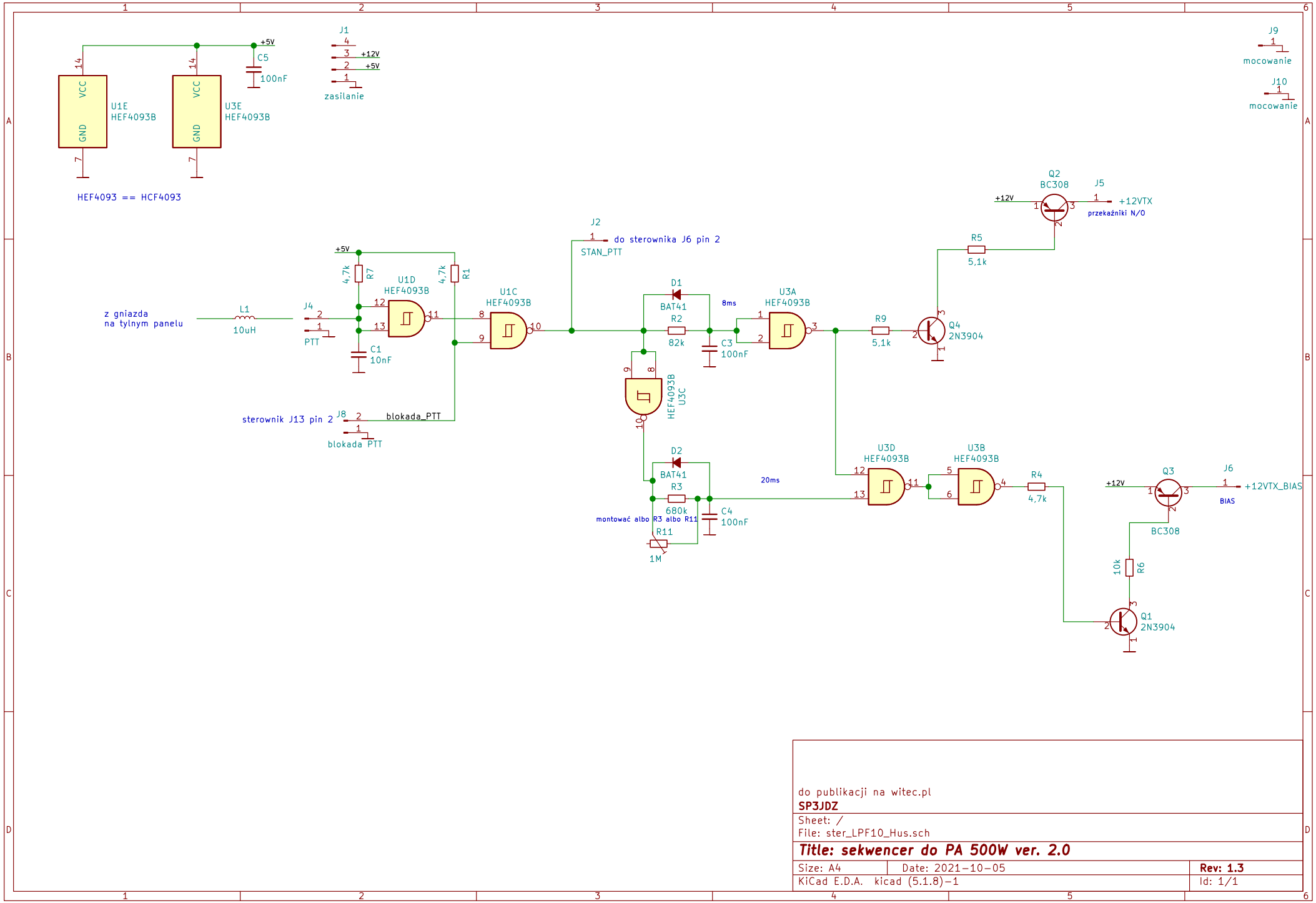

do publikacji na witec.pl

SP3JDZ

Sheet: /

File: ster_LPF10_Hus.sch

Title: sekwencer do PA 500W ver. 2.0

Size: A4	Date: 2021-10-05	**Rev: 1.3**
KiCad E.D.A. kicad (5.1.8)-1		Id: 1/1